S-SERIES

MEASUREMENTS
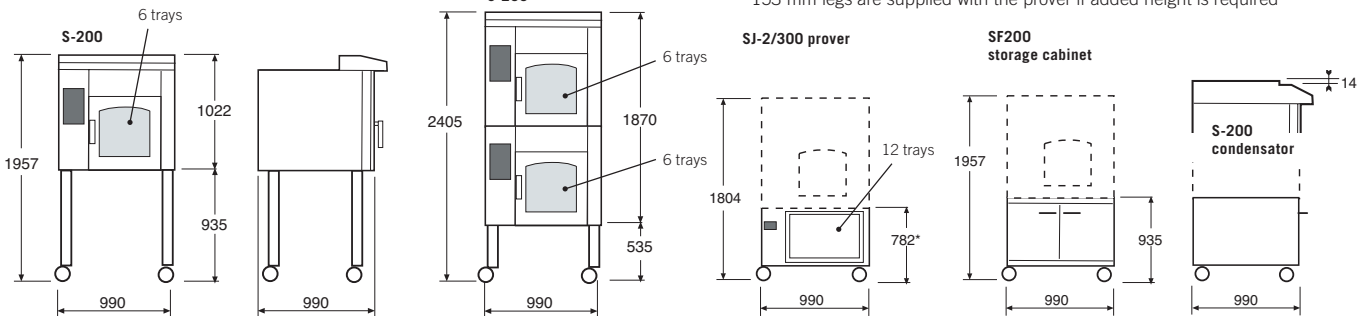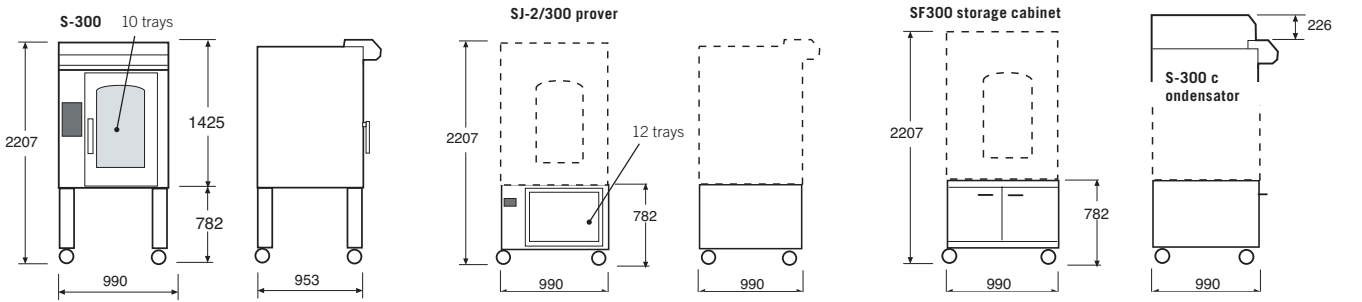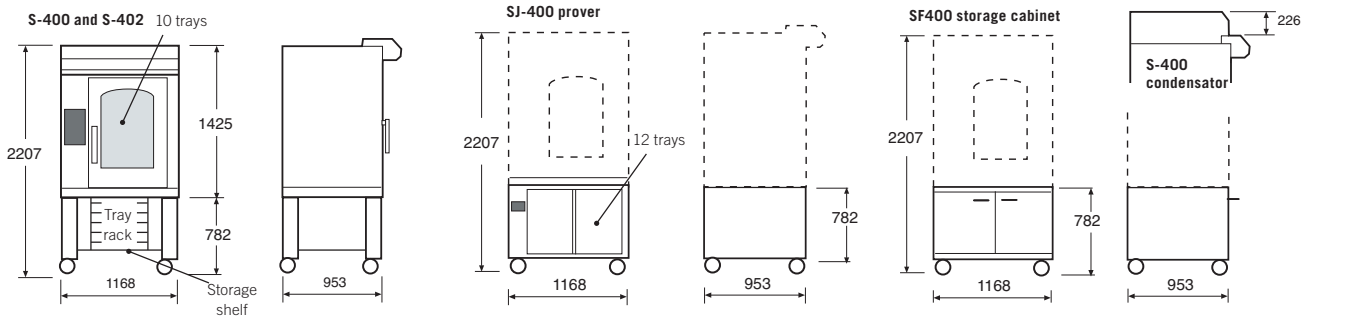
* 153 mm legs are supplied with the prover if added height is required